Power Block:

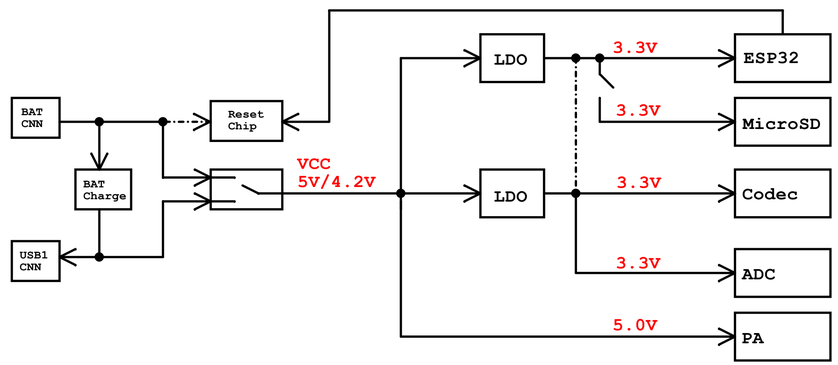

System Block:

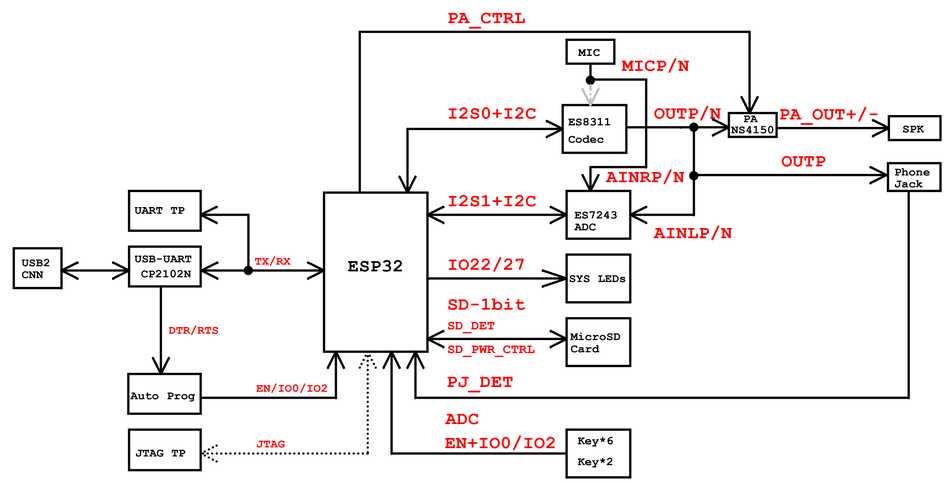

ESPRESSIF
乐鑫信息科技（上海）股份有限公司

Title	<ESP32-LyraT-Mini>	
Size D	Document Number <01_DesignBlock>	Rev V1.2
Date: Wednesday, June 05, 2019	Sheet 1 of 2	

Power System:

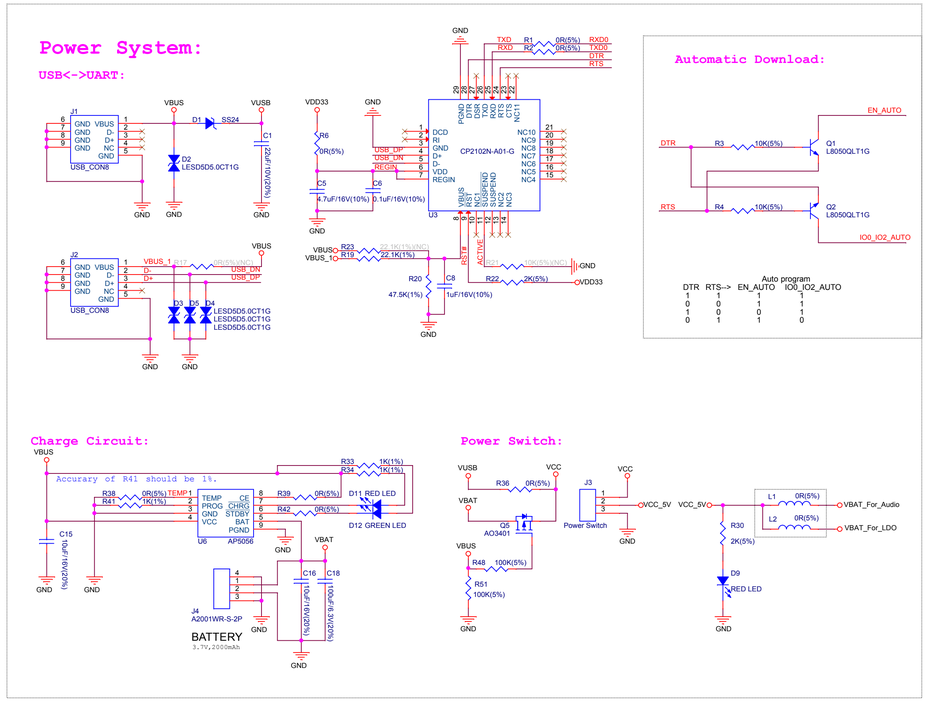

Digital System:

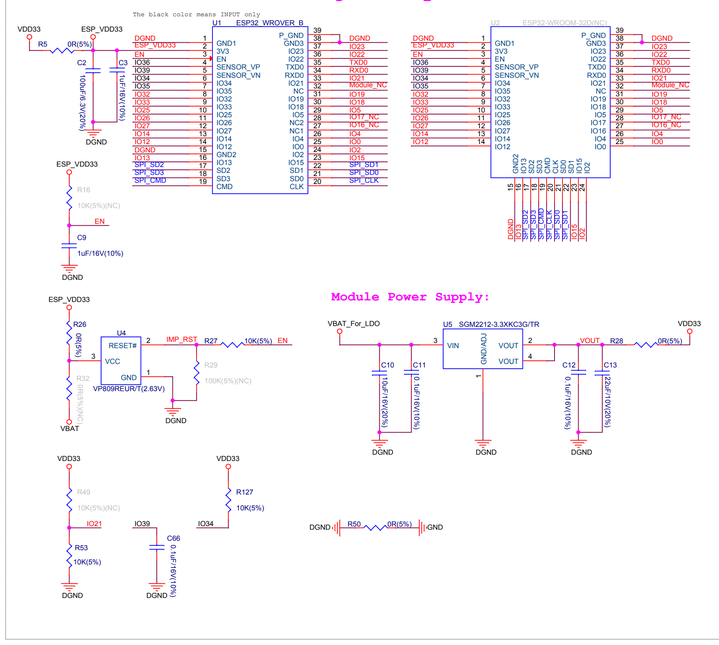

System LEDs:

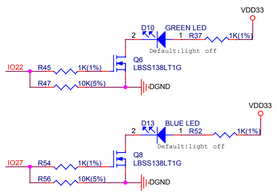

JTAG:

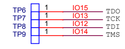

UART:

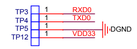

MicroSD_CARD:

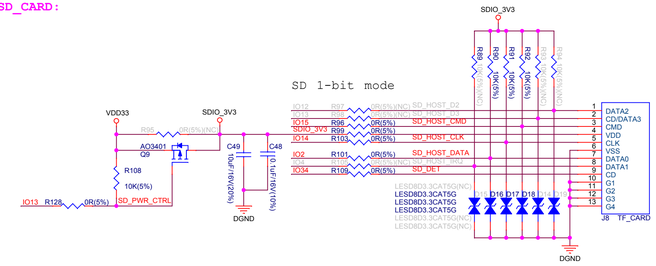

6-Keys:

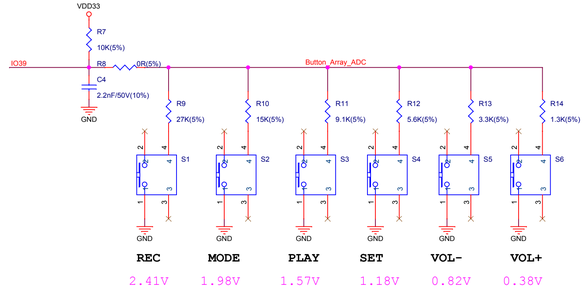

Reset/Download Keys:

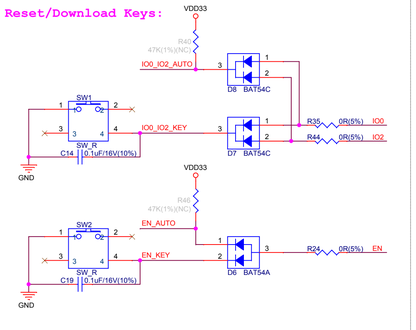

Fixing Holes:

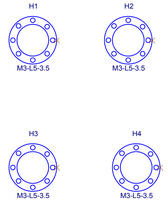

CODEC:

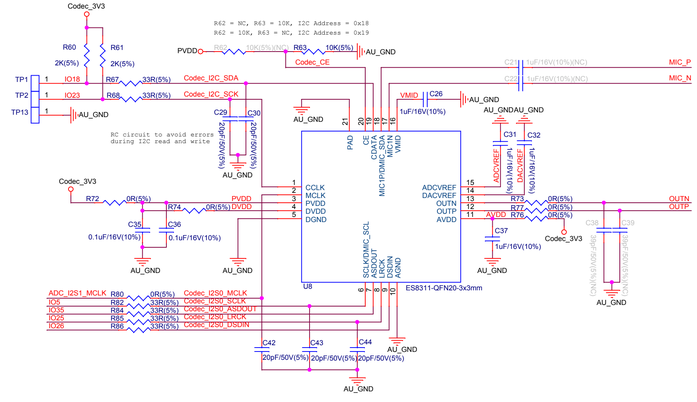

ADC:

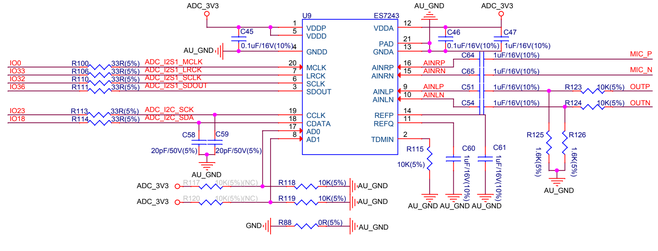

Audio Power Supply:

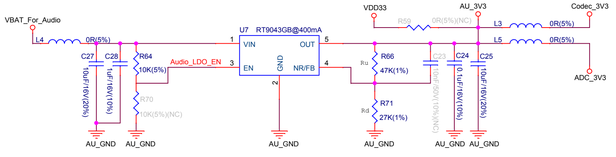

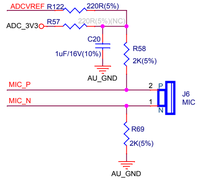

AUDIO OUT:

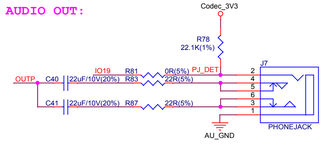

PA:

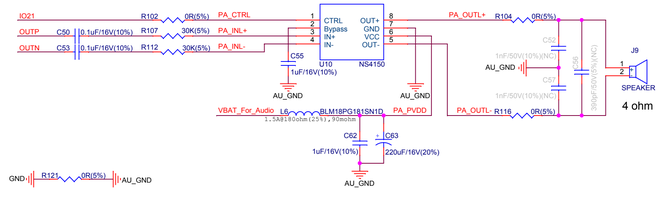

ESPRESSIF 乐鑫信息科技（上海）股份有限公司			
Title	<ESP32-LyraT-Mini>		
Size	Document Number		Rev
D	<02_ESP32-LyraT-Mini>		V1.2
Date:	Wednesday, June 05, 2019	Sheet 2 of 2	